ZORBA

Granite sink with tap, 1-bowl with drainer

Product code: ZQZV2113
EAN: 5908212048566
Color: graphite
Warranty [years]: 18

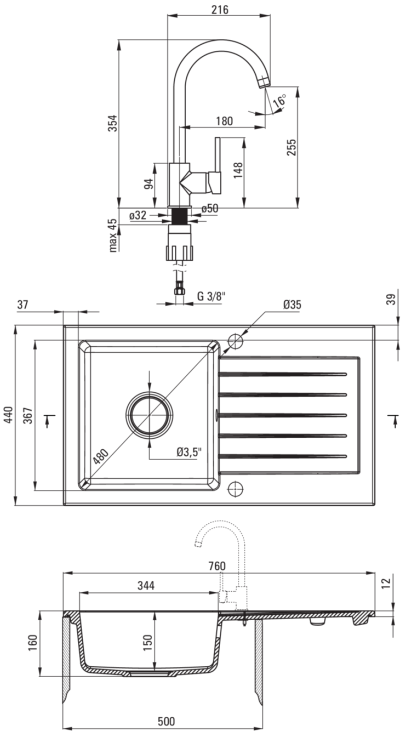

Sink	
Finish	graphite
Surface type	matte
Material	granite
Installation method	inset
Number of bowls	1
Minimum cabinet width [mm]	500
Width [mm]	440
Length [mm]	760
Height [mm]	160
Bowl depth [mm]	150
Cut-out length [mm]	740
Cut-out width [mm]	420
Reversible	Yes
Equipped with accessories	Yes
Number of holes	2
Number of pre-drilled holes	0
Hydrophobicity	Yes
Sink waste kit	
Finish	steel
Plug type	automatic
Low siphon/ space saver	Yes
Possibility to connect a dishwasher/ washing machine	Yes
Mixer	
Finish	graphite, chrome
Mixer type	mixer, single-handle
Installation method	standing
Flow class [l/min]	Z - 4-9 l/min
Acoustic group [db]	I (x ≤ 20)
Mixer cartridge	
Ceramic cartridge size	35 mm
Spout	
Spout type	swivel
Mixer spout range [mm]	180
Aerator	
Aerator type	honeycomb
Aerator size	M22
Connecting hose	
Length [mm]	450
Installation thread	3/8"
Connection thread	M10