zuiver°

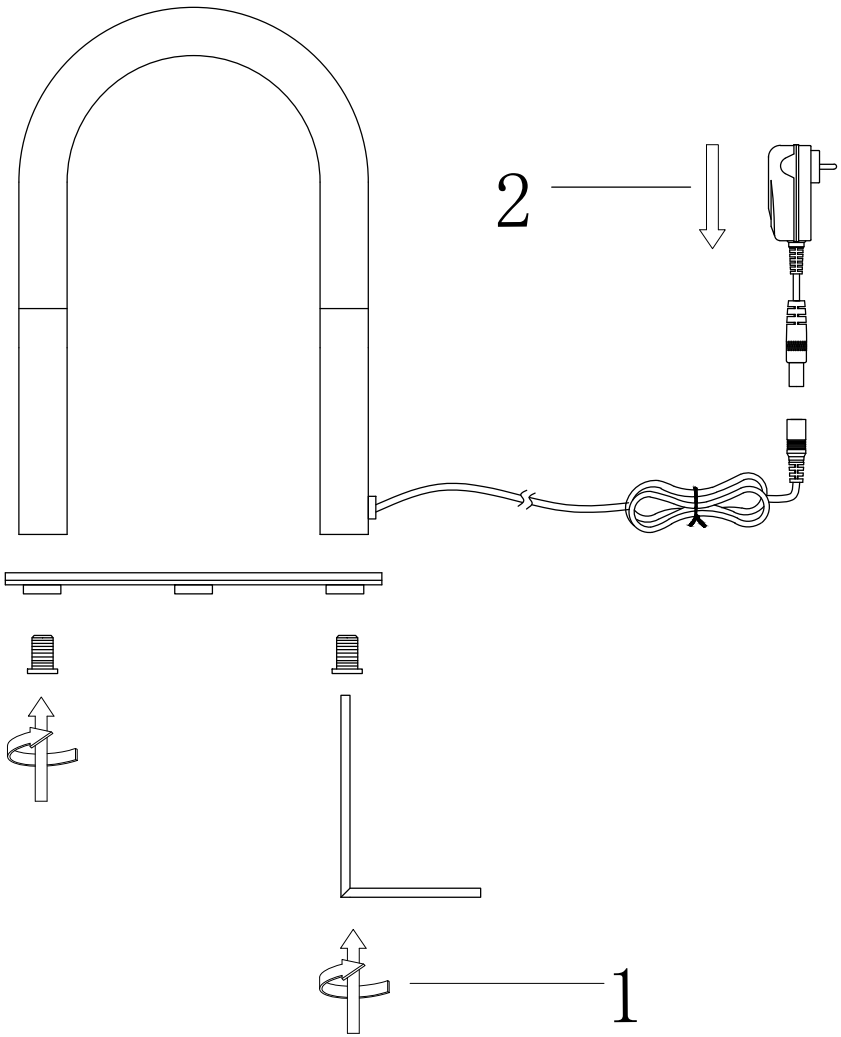

Assembly Instruction

1. Before assembling, be sure to turn off the main switch
2. Please use Max 8W LED bulb for this lamp
3. Don’t use hard or sharp things to touch the shade in order to avoid scratching.
4. Keep away from children: don’t let them touch the electric parts of this lamp.

If (part of) the cable of this lamp is damaged, it should only be replaced by the manufacturer or his service agent or similar qualified person in order to avoid a hazard.

Item Number: 5200167