
10
9
8
7
6
5
4
3
2
1
0

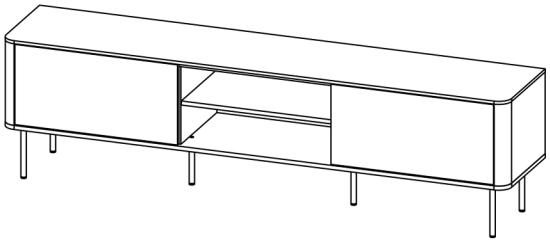

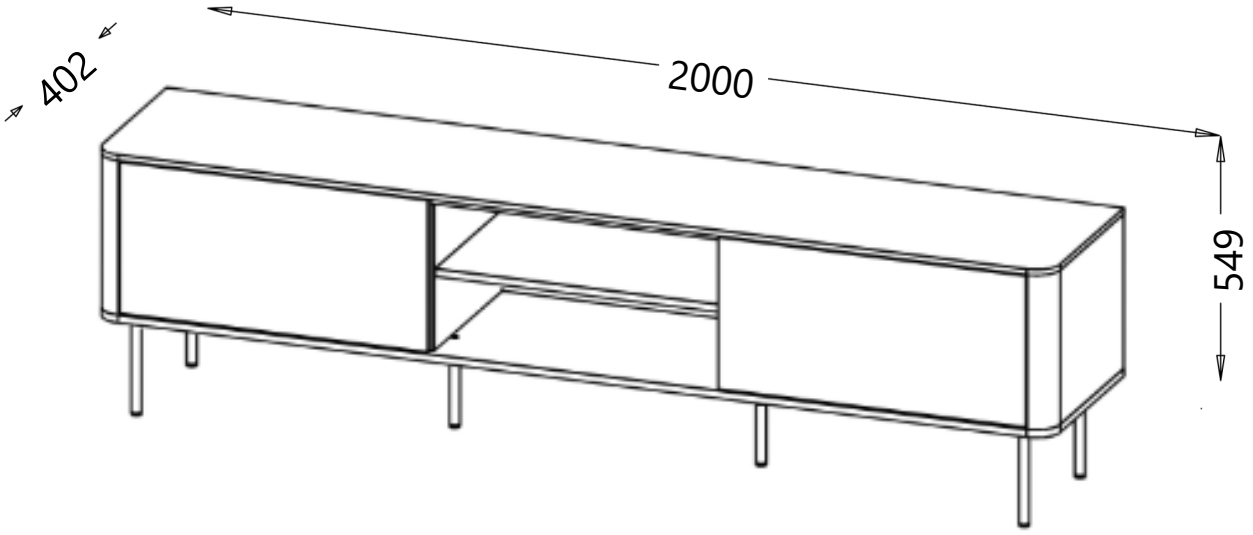
402
2000
549

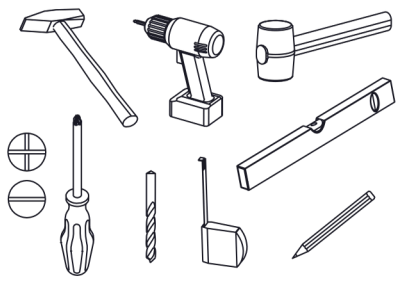

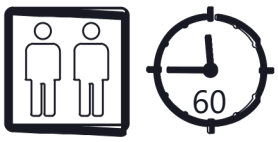
60

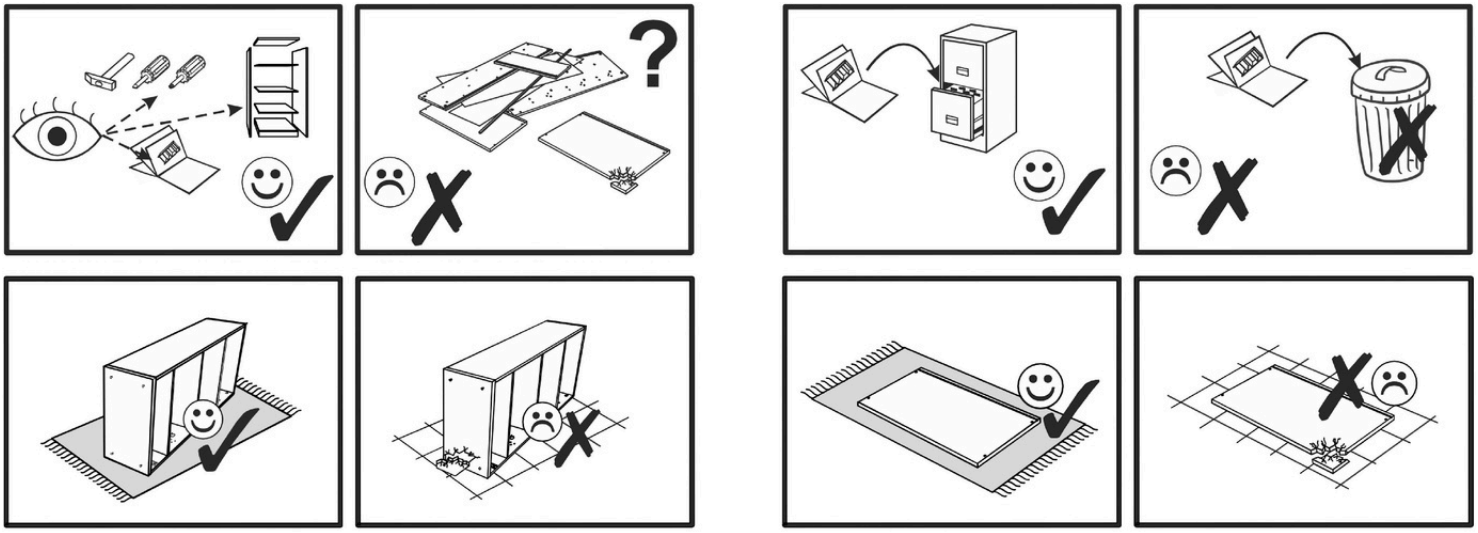

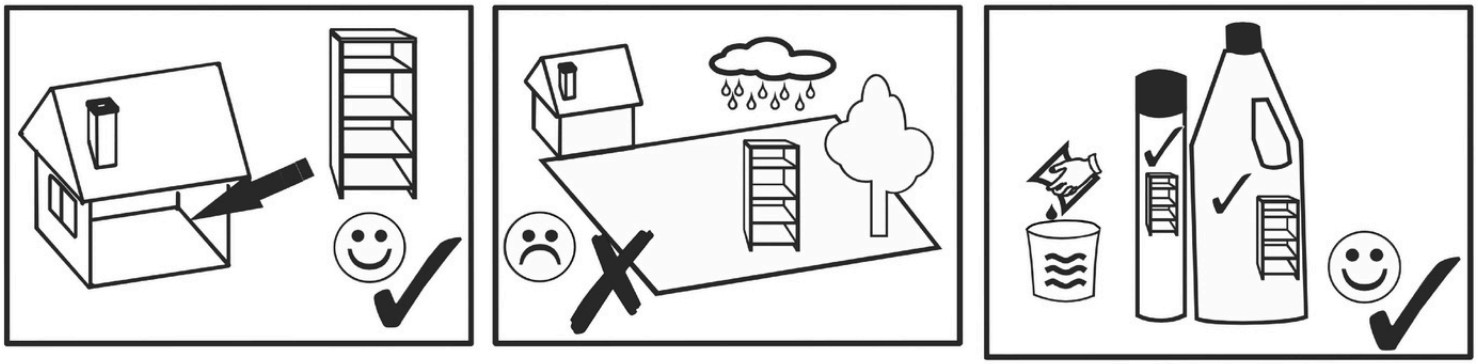

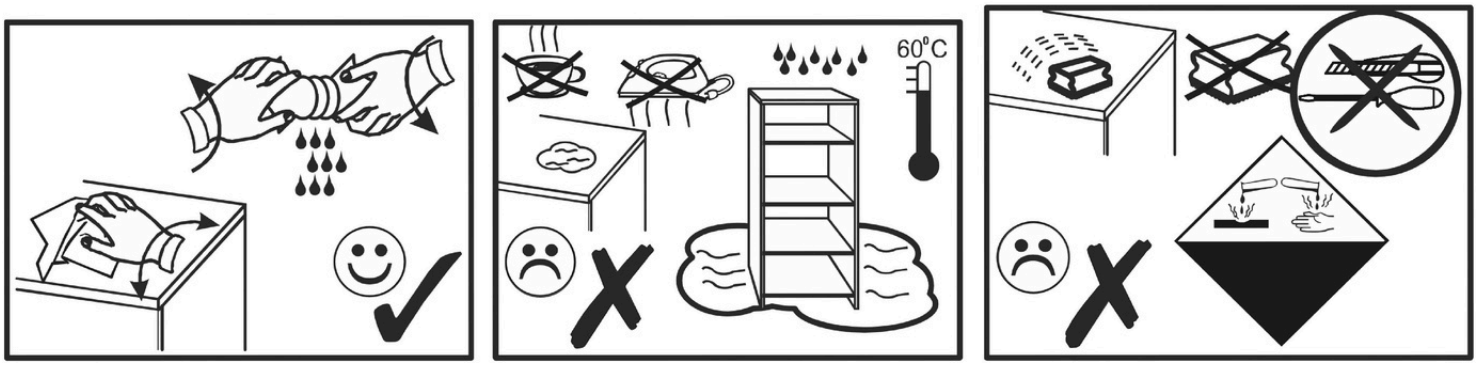

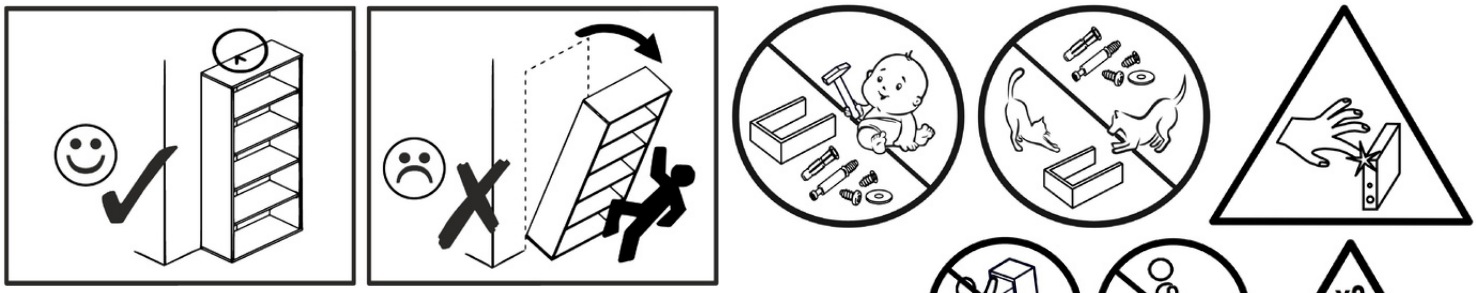
60°C



X2

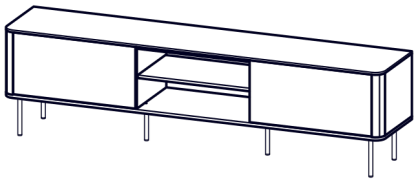

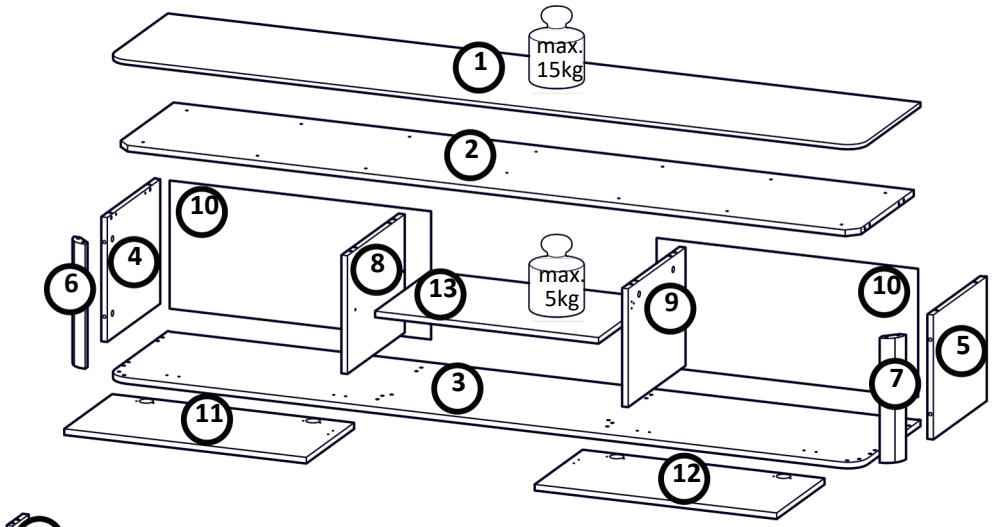

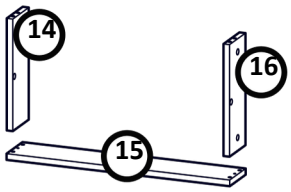

Nr	Xmm	Ymm	Zmm	x
1	2000	402	12	1
2	1967	377	16	1
3	2000	402	16	1
4	321	351	16	1
5	321	351	16	1
6	321	50	50	1
7	321	50	50	1
8	305	377	16	1
9	305	377	16	1

Nr	Xmm	Ymm	Zmm	x
10	694	330	2,5	2
11	315	643	16	1
12	315	643	16	1
13	594	362	16	1
14	289	105	16	1
15	593	105	16	1
16	289	105	16	1

A1 8x Ø7 x5 0	B1 20x Ø8 x3 5	B8 4x Ø8 x3 0	I20 12x Ø4/Ø17	K5 16x 34mm	K1 16x Ø1 5x 12
B2 8x 7,8x35	B3 2x Ø8 x5 0	[illegible] 48x	W2 1x 4mm	G34 12x 3, 5x 16	L21 2x
[illegible] 24x 4x16	[illegible] 6x h200	[illegible]	G47 4x Ø3 ,5 x1 3	G13 14x Ø4 x2 5	[illegible] 2x 37x 3 7x3
F2 5x Ø5	D4 4x PZ3 5OD	C4 4x Z35 OD	G49 4x 3, 5x 25	N1 2x M4x9	I18 2x Ø14

I

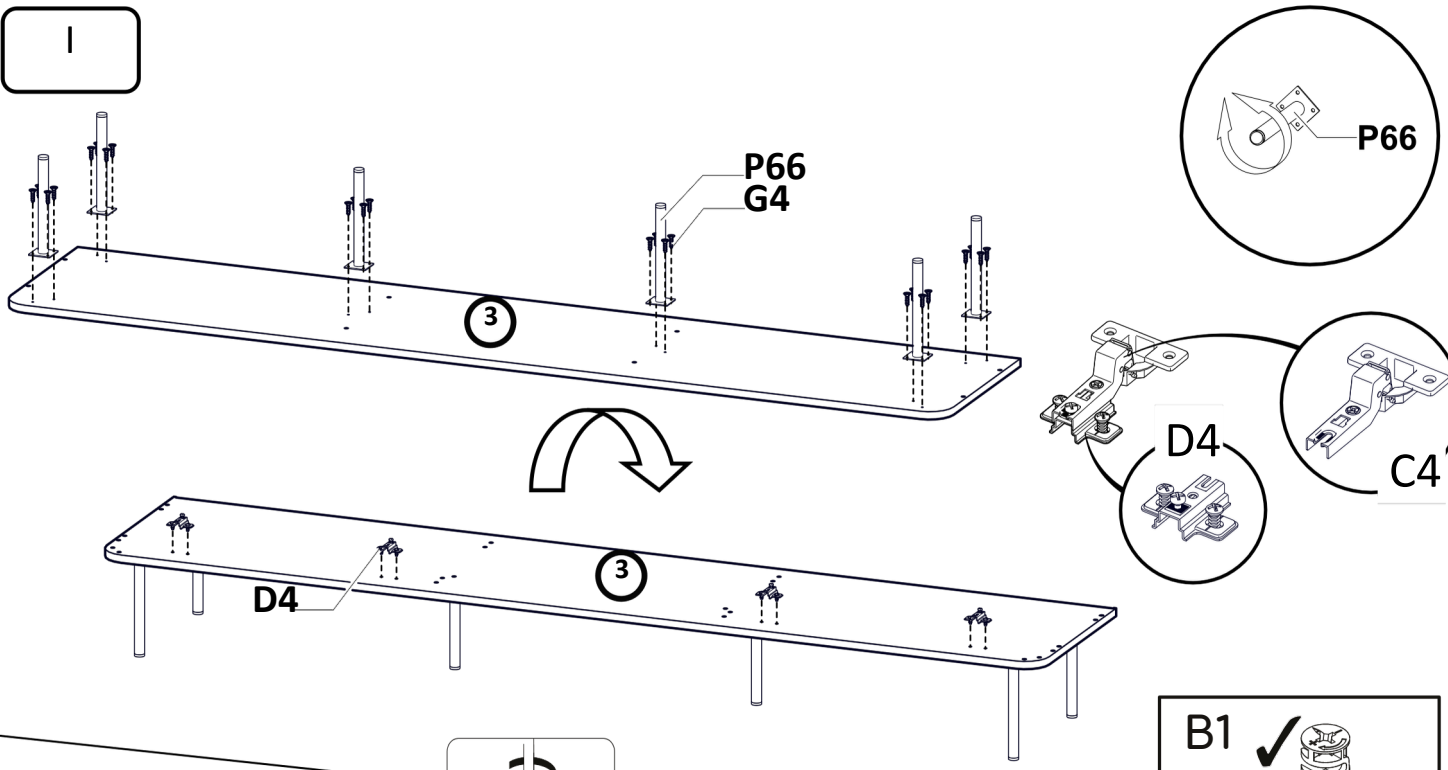
P66
G4
3
D4
C4
3
D4

II

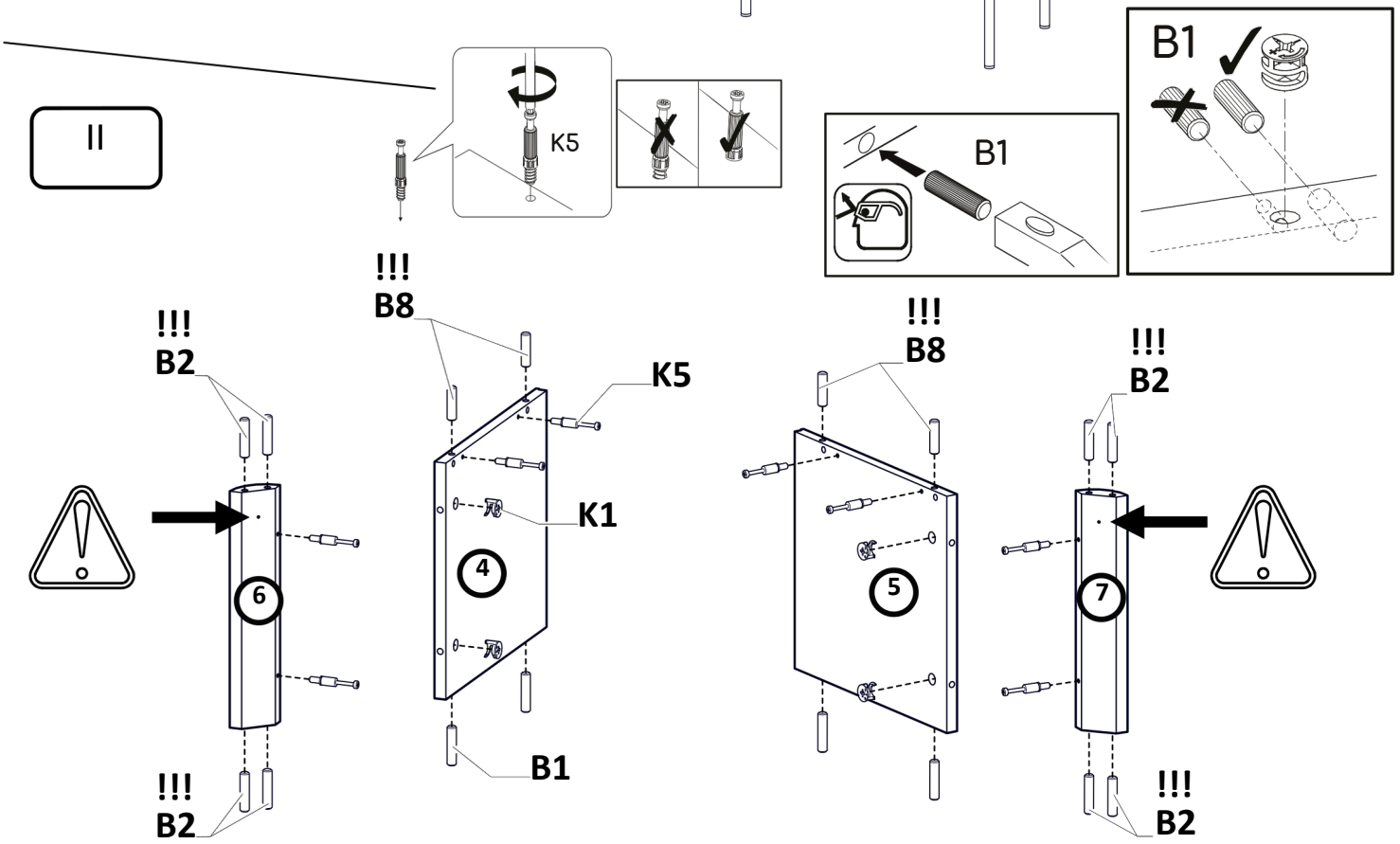
K5
B1
B1
!!!
B8
!!!
B2
K5
K1
4
B1
!!!
B2
6
!!!
B2
!!!
B8
5
!!!
B2
7
!!!
B2

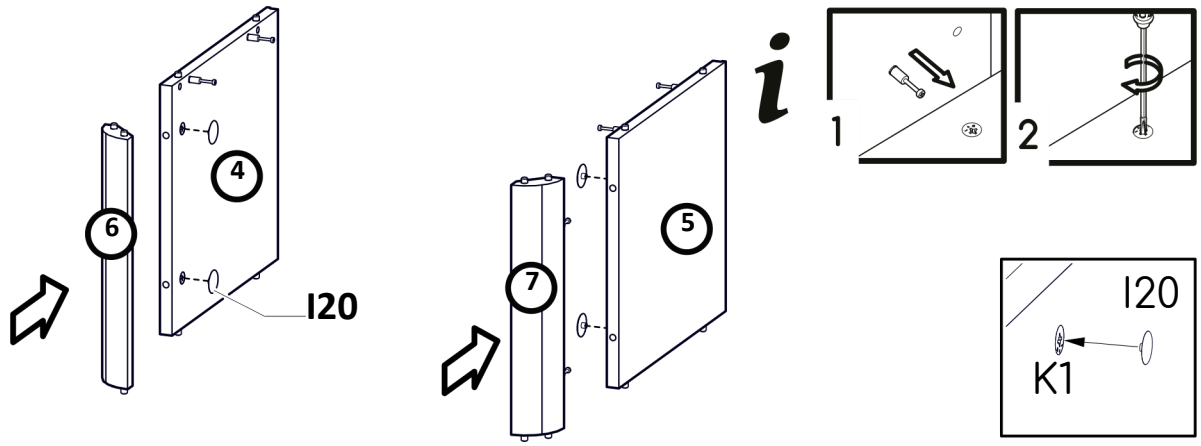
4
6
I20
5
7
i
1
2
I20
K1

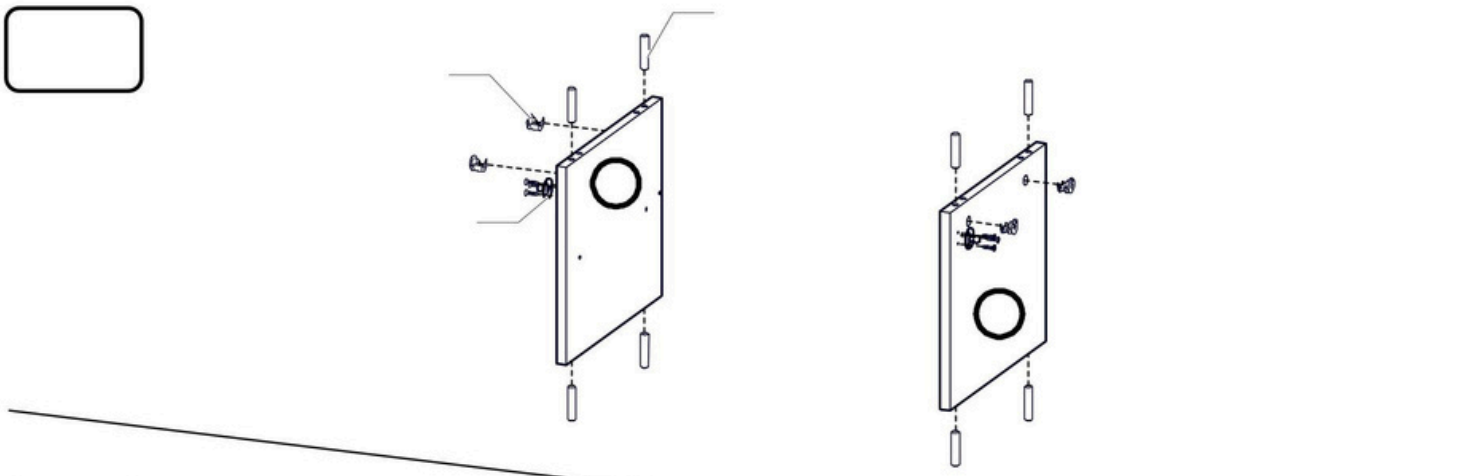

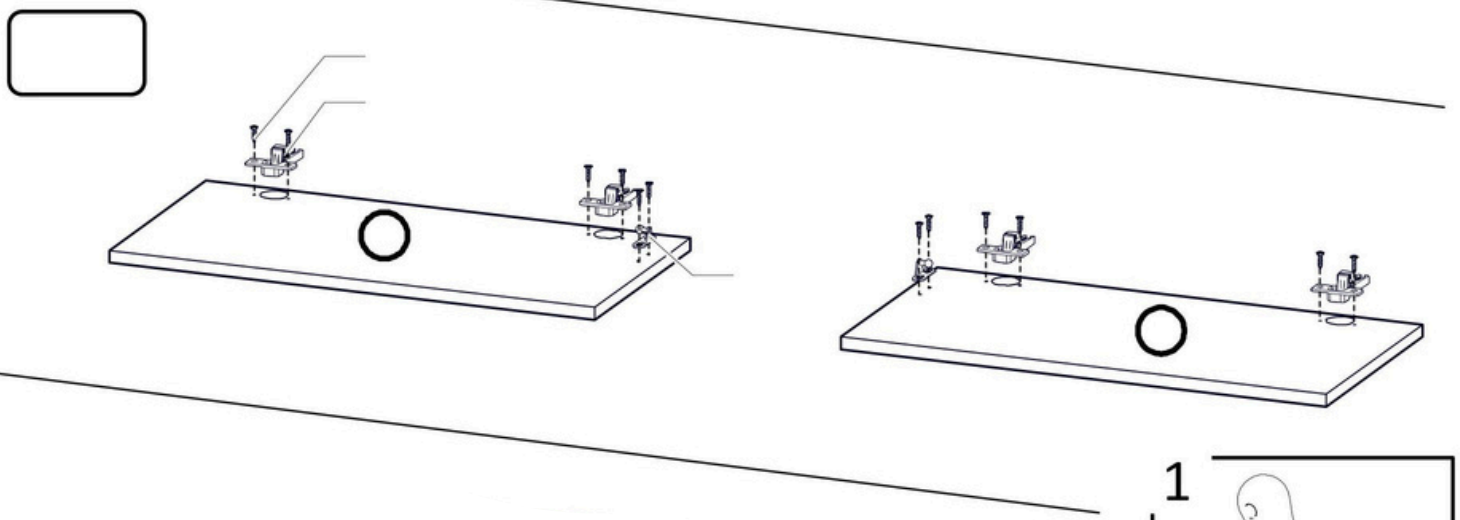

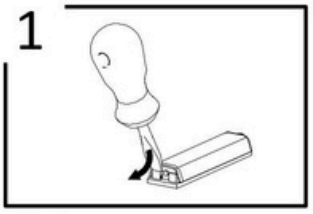
1

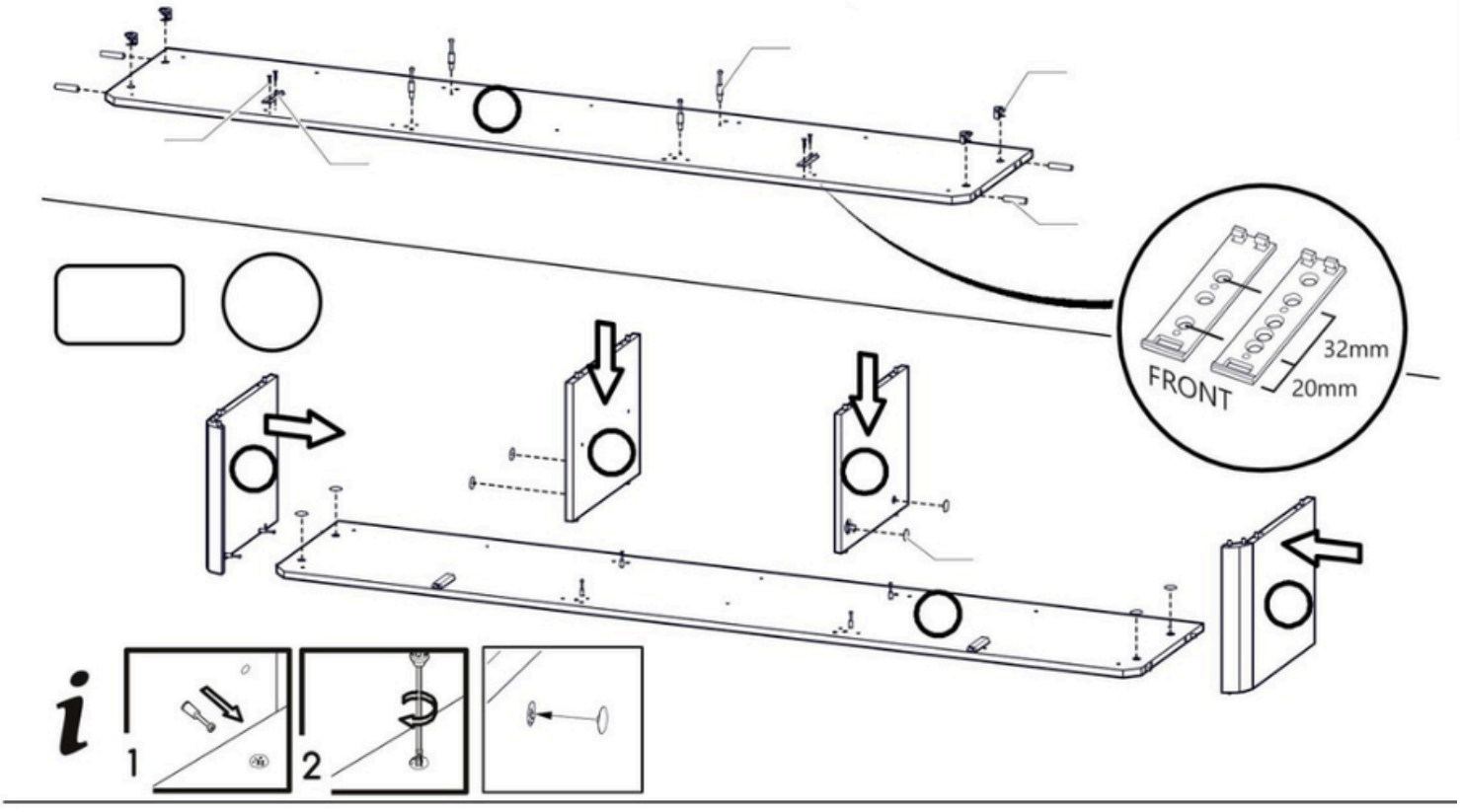
32mm
20mm
FRONT
1
2

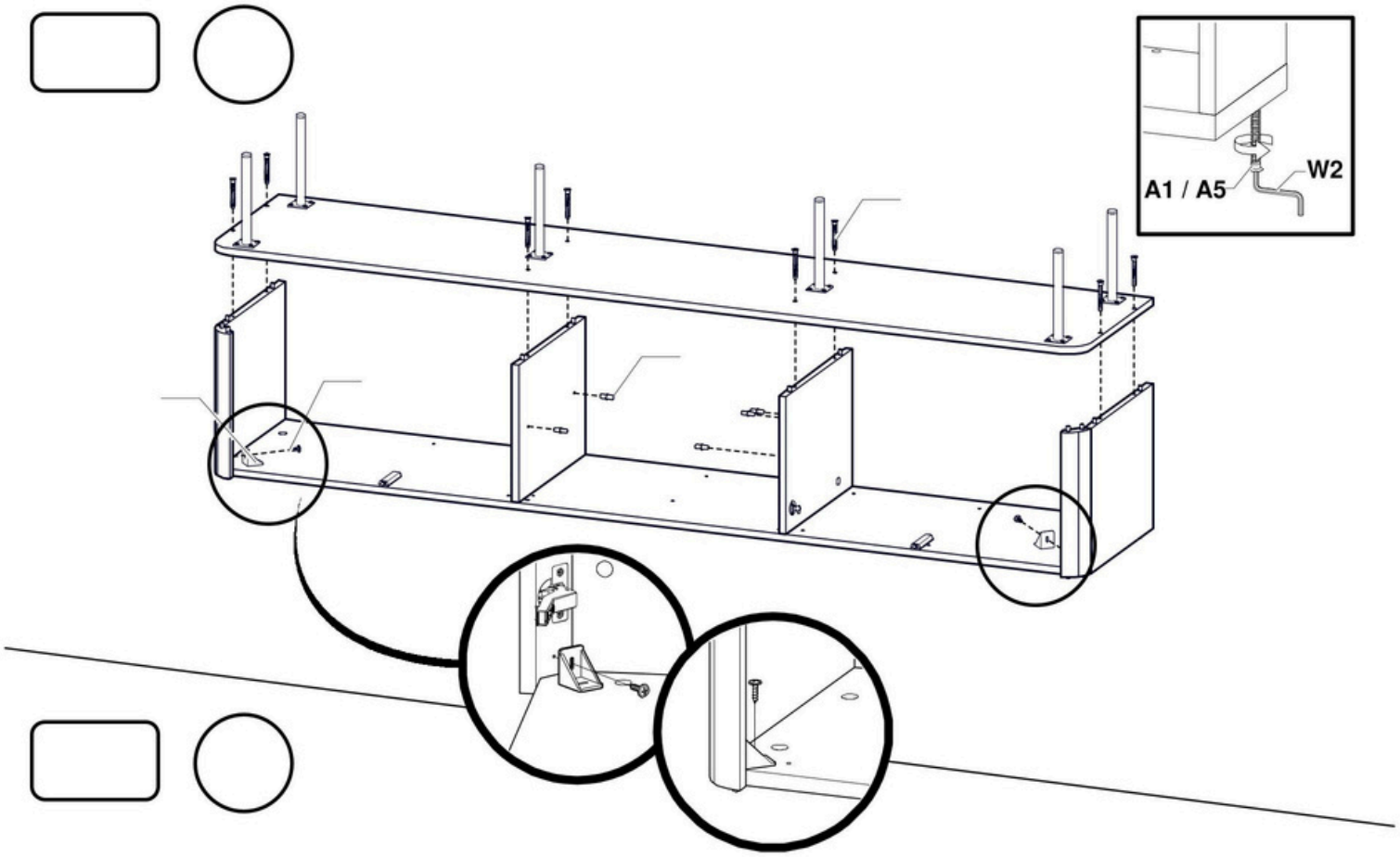
A1 / A5
W2

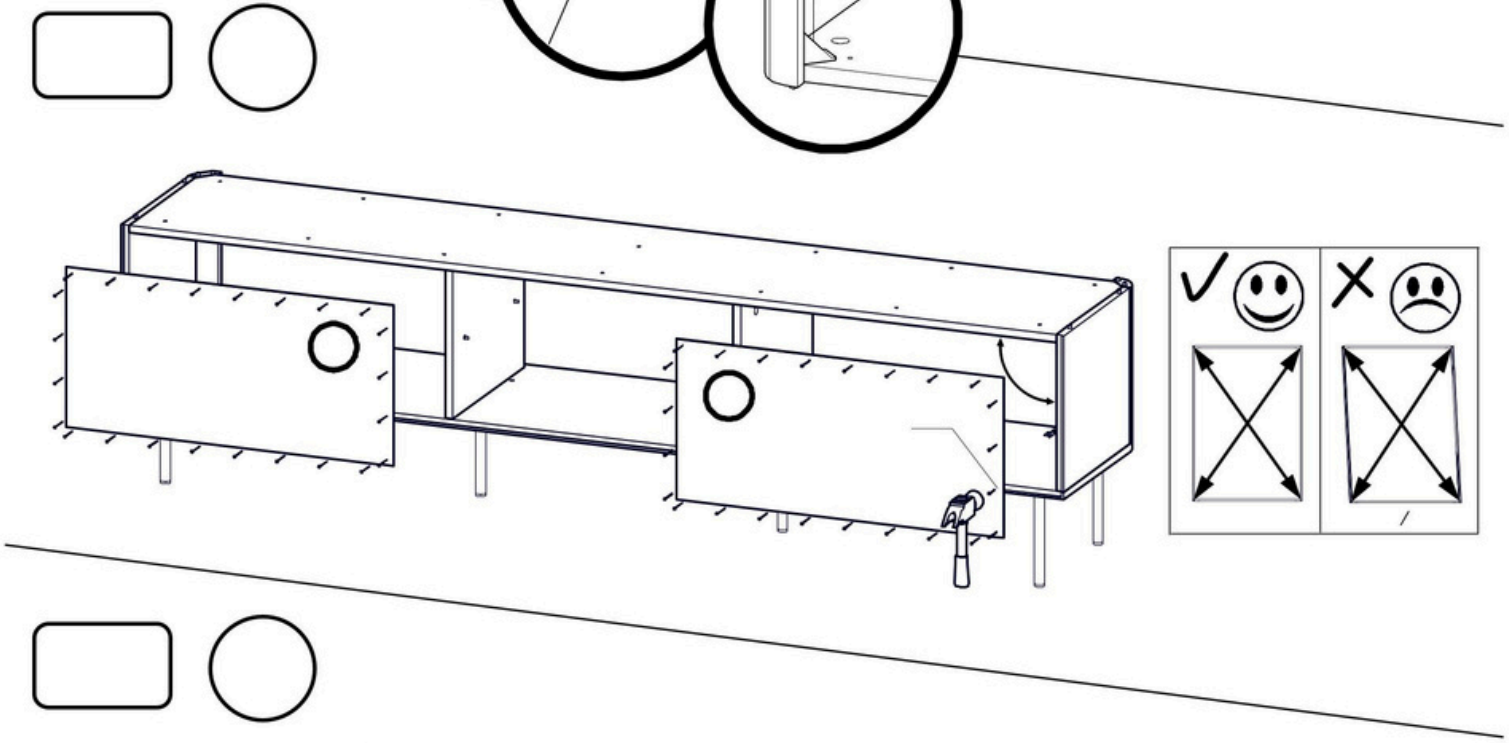

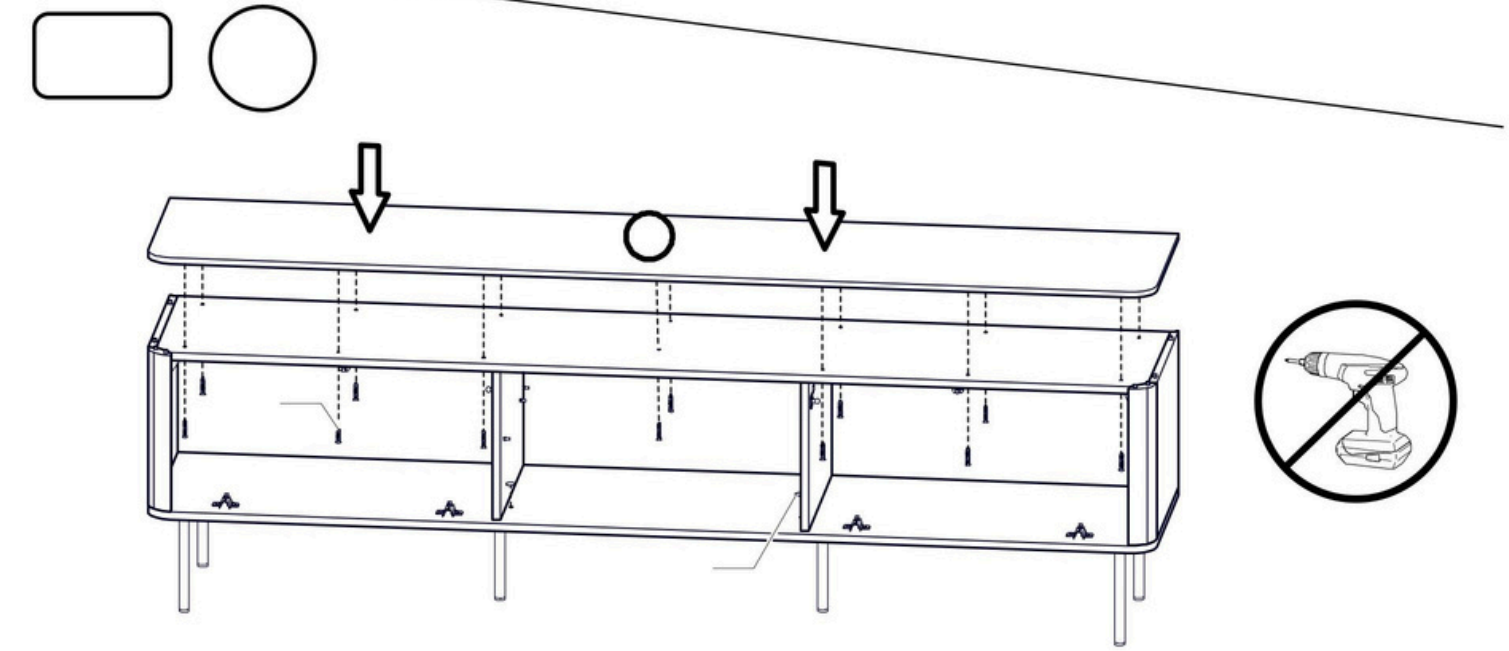

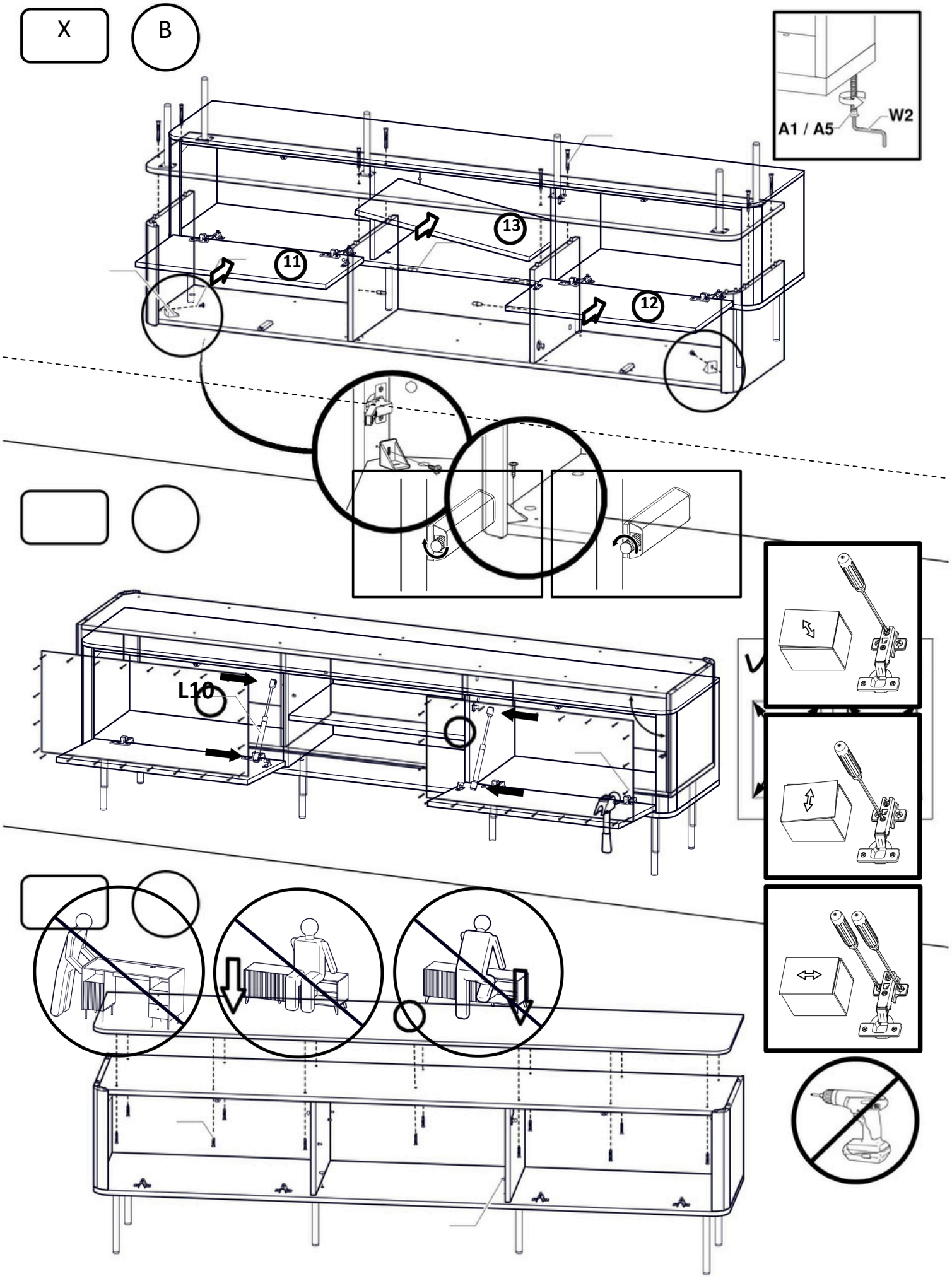
X
B
A1 / A5
W2
13
11
12
L10