

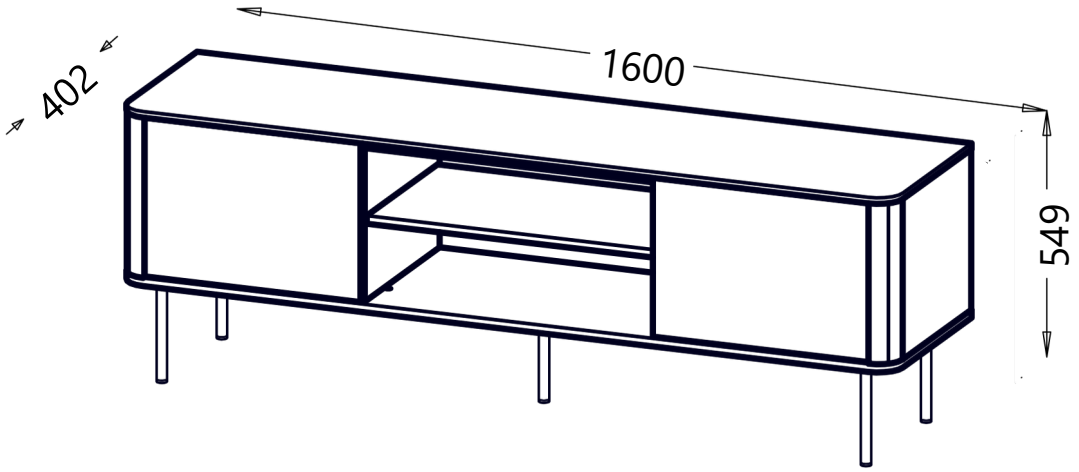
1600
402
549

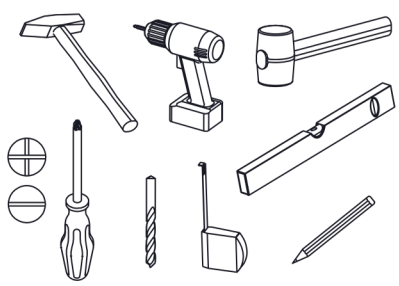

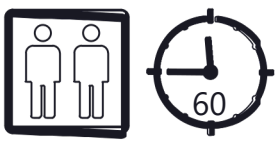
60

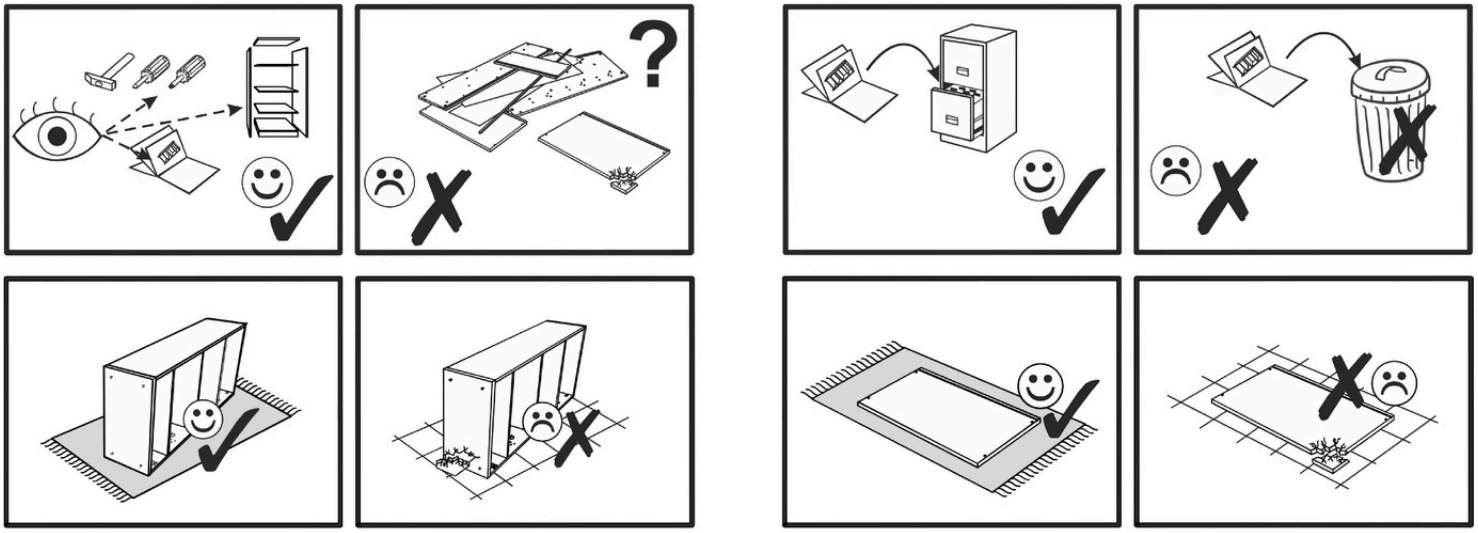

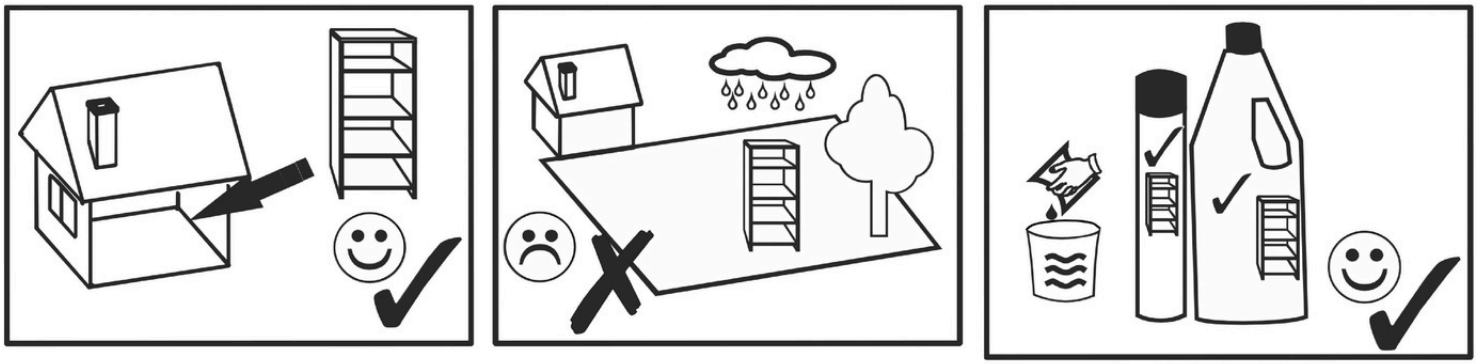

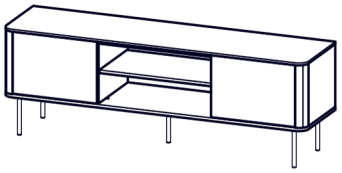

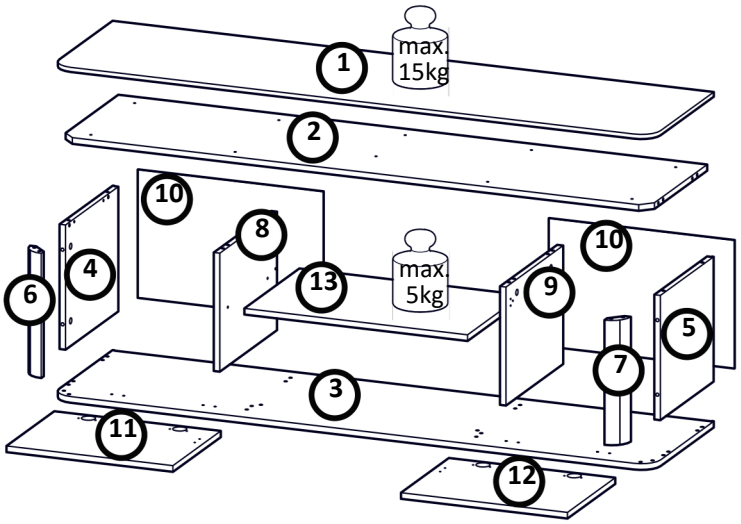

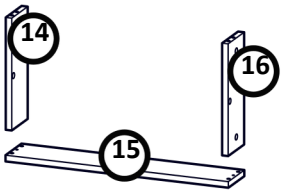

Nr	Xmm	Ymm	Zmm	x	1
1600	402	12	1	2	1567	377
16	1	3	1600	402	16	1	4	321
351	16	1	5	321	351	16	1	6
321	50	50	1	7	321	50	50	1	8
305	377	16	1	9	305	377	16	1	

Nr	Xmm	Ymm	Zmm	x	10
494	330	2,5	2	11	315	443	16
1	12	315	443	16	1	13	594
362	16	1	14	289	105	16	1	15
593	105	16	1	16	289	105	16
1							

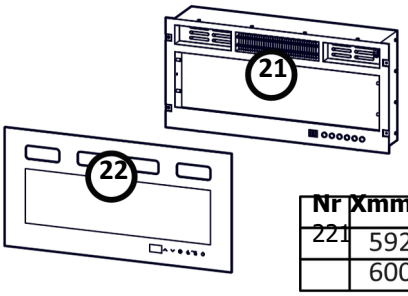

Nr	Xmm	Ymm	Zmm	x	211
221	592	282	110		
	600	304	4,5		

G47 4x Ø3 ,5 x1 3	M33 2x 37x 3 7x3	G13 10x Ø4 x2 5	F2 5x Ø5	G34 12x 3, 5x 16	C4 4x Z35 OD
D4 4x PZ3 5OD	W4 36x	L10 2x	N1 2x M4x9	G49 4x 3, 5x 25	I18 2x Ø14
B8 4x Ø8 x3 0	B1 20x Ø8 x3 5	K5 16x 34mm	K 16x Ø1 5x 12	I20 12x Ø4/Ø17	A1 8x Ø7 x5 0
2x Ø8 x5 0	W2 1x 4mm	L21 2x	G4 20x 4x16	P66 5x h200	B2 8x Ø7. 8x3 5

I

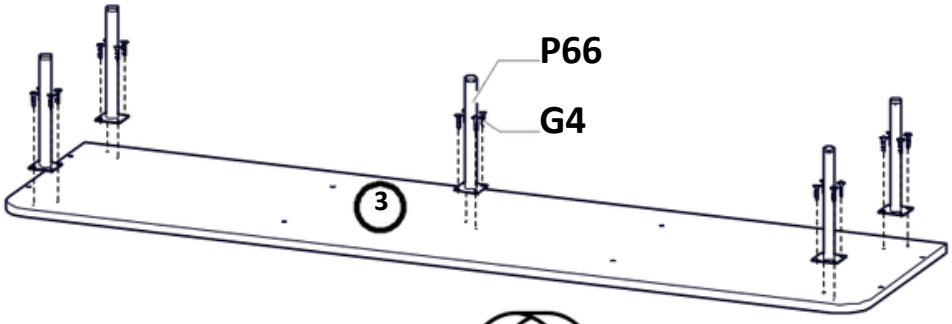
P66
G4
3

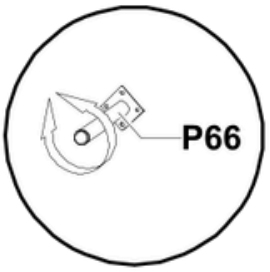
P66

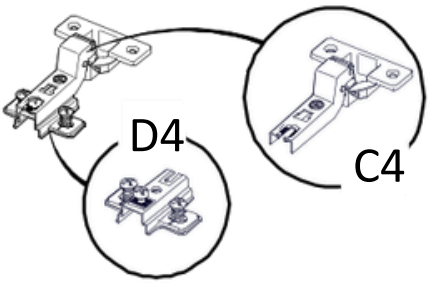
D4
C4

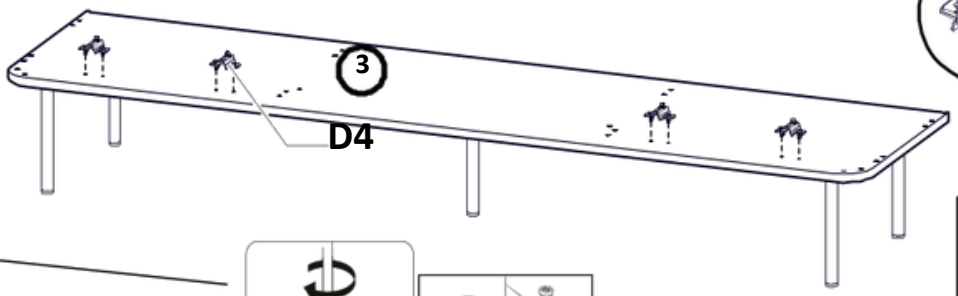
3
D4

II

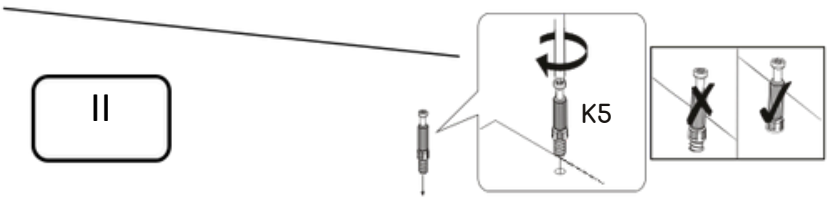
K5

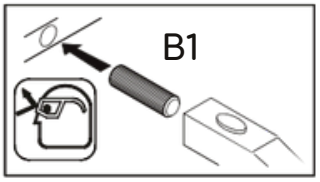
B1

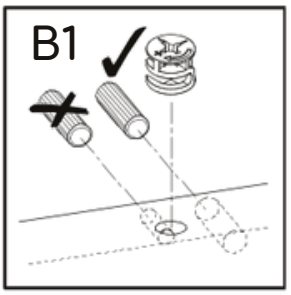
B1

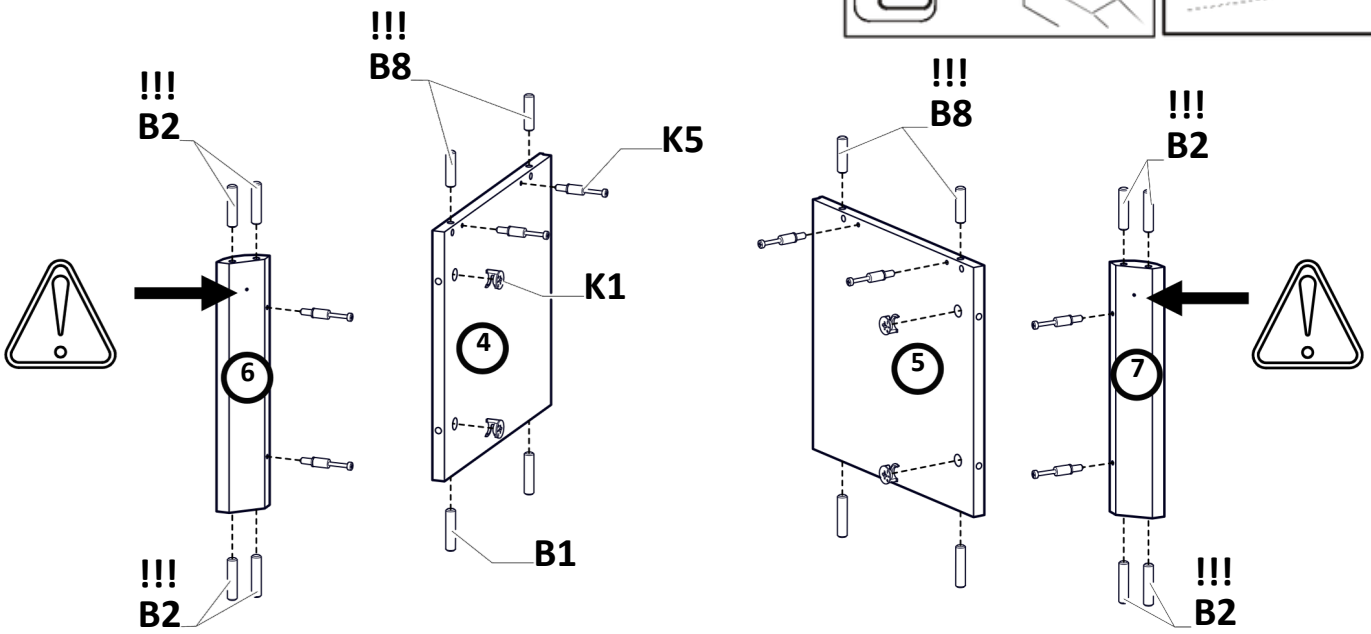
!!!
B2
!!!
B8
K5
K1
4
6
5
7
B1
!!!
B2
!!!
B8
!!!
B2
!!!
B2

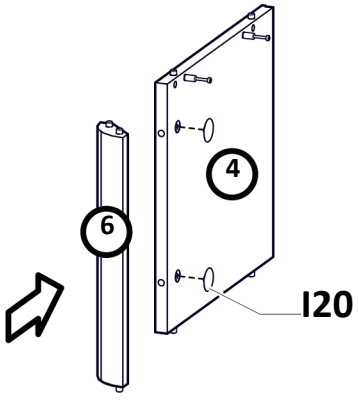
4
6
I20

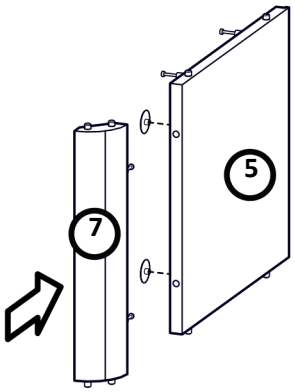
5
7

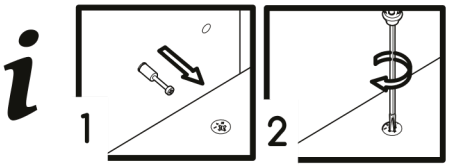
1
2

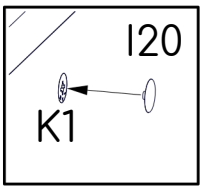
I20
K1

III

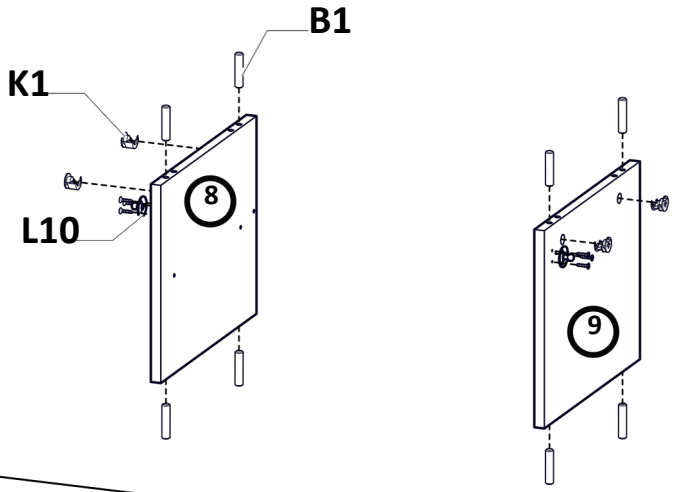
B1
K1
L10
8
9

IV

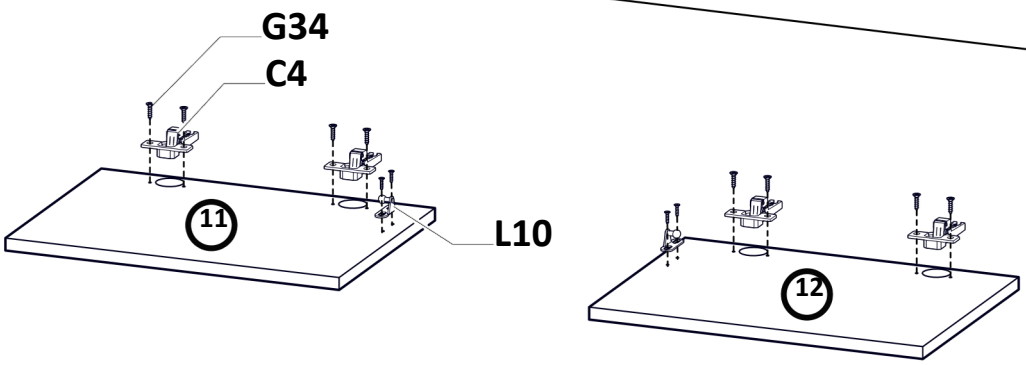
G34
C4
11
L10
12

V

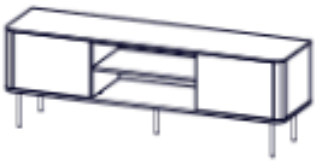

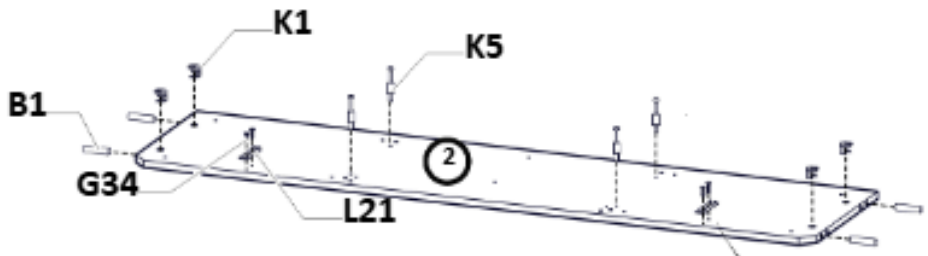
K1
K5
B1
G34
L21
2

VI B

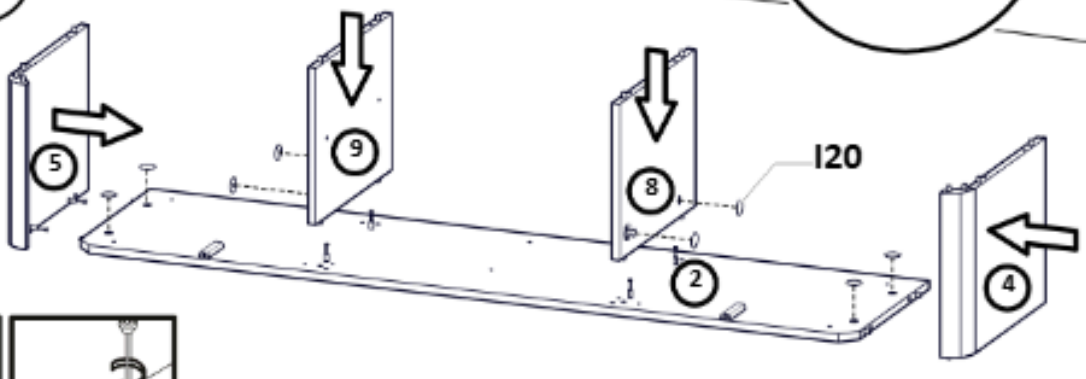
5
9
8
I20
2
4

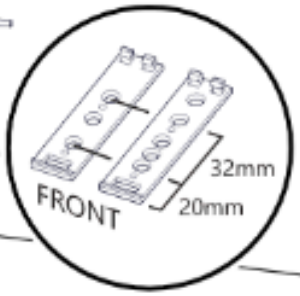
32mm
20mm
FRONT

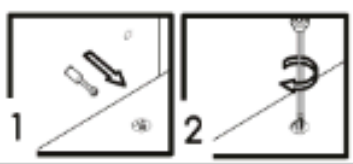
1
2

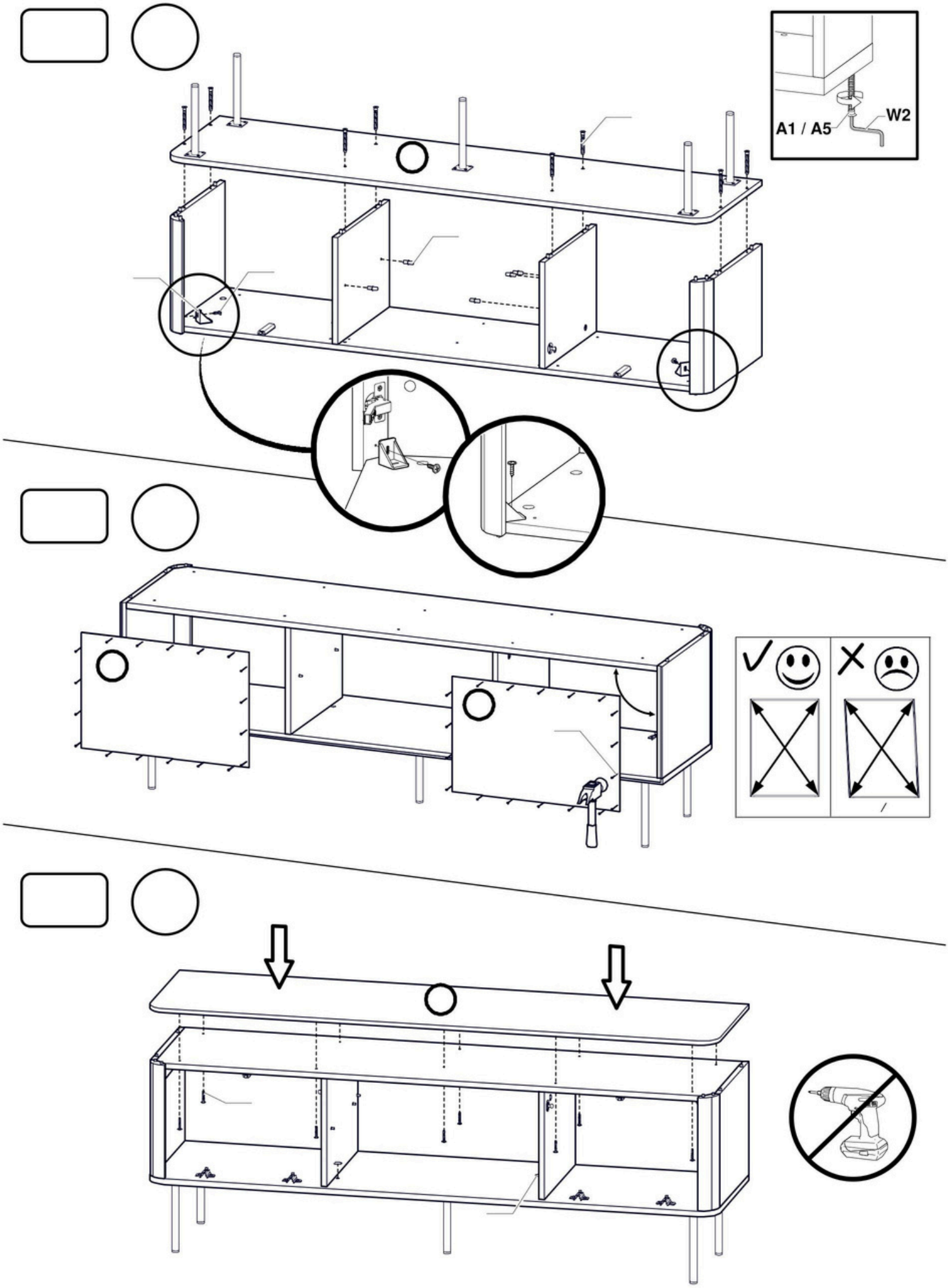
A1 / A5
W2

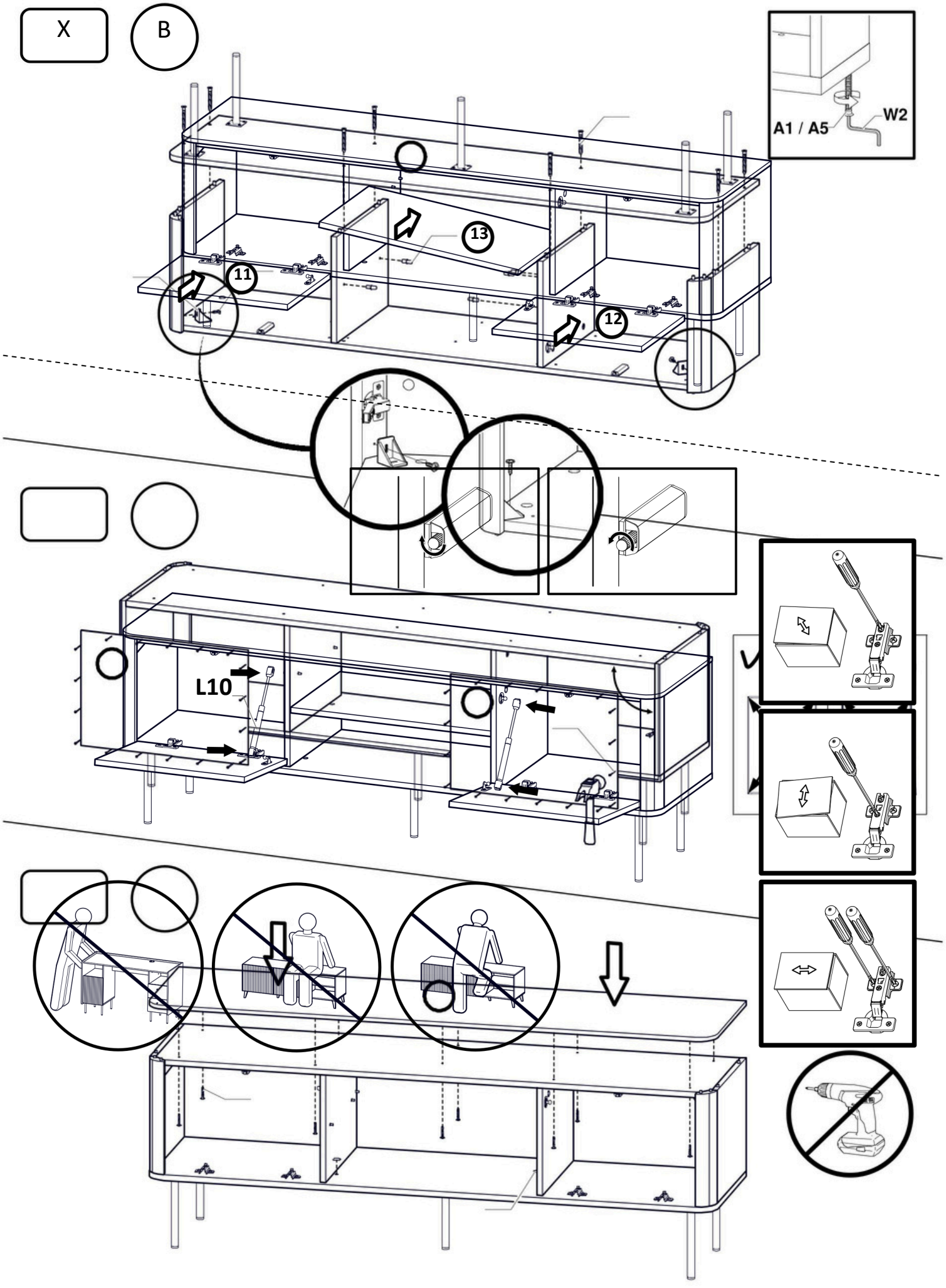
X
B
A1 / A5
W2
13
11
12
L10